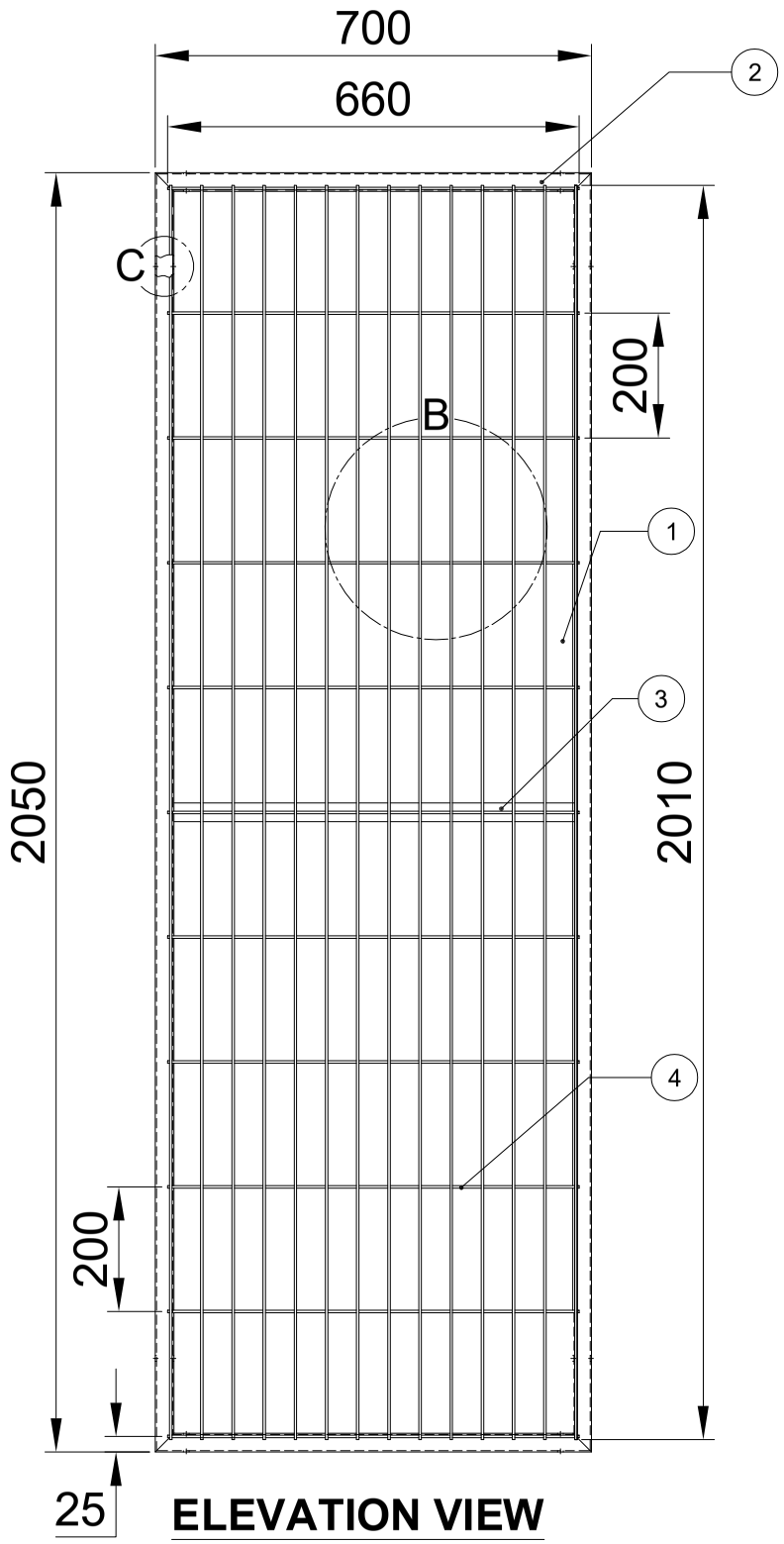

ELEVATION VIEW

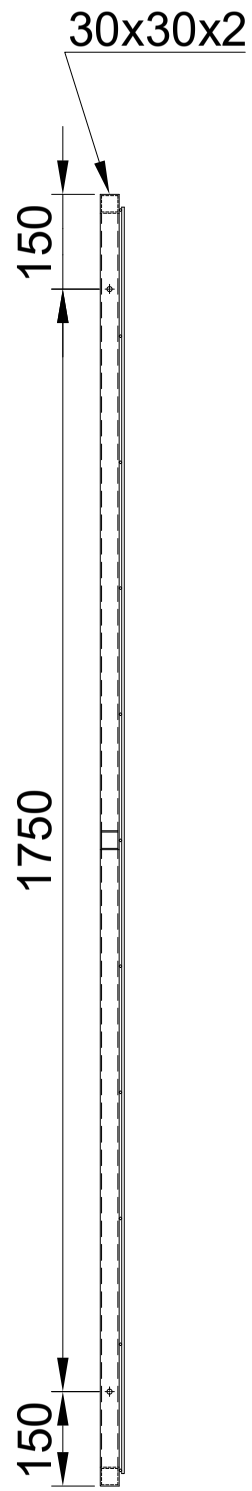

SIDE VIEW

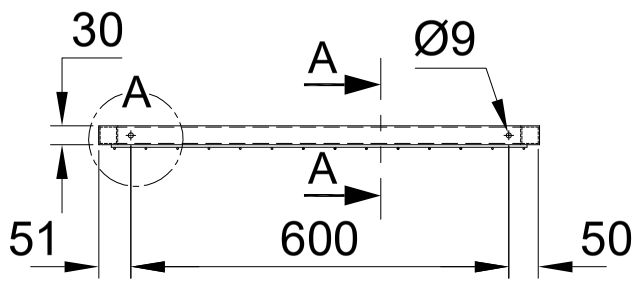

TOP VIEW

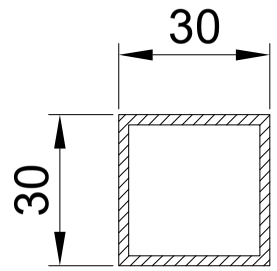

SECTION A-A
(SCALE 4:1)

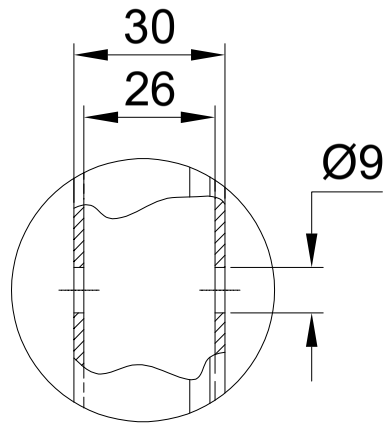

DETAIL **C**
(SCALE 4:1)

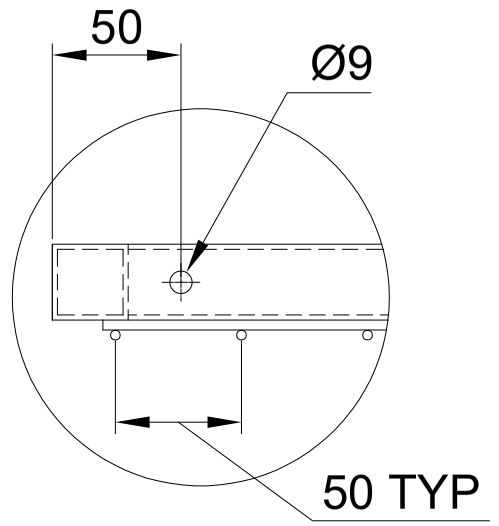

DETAIL **A**
(SCALE 4:1)

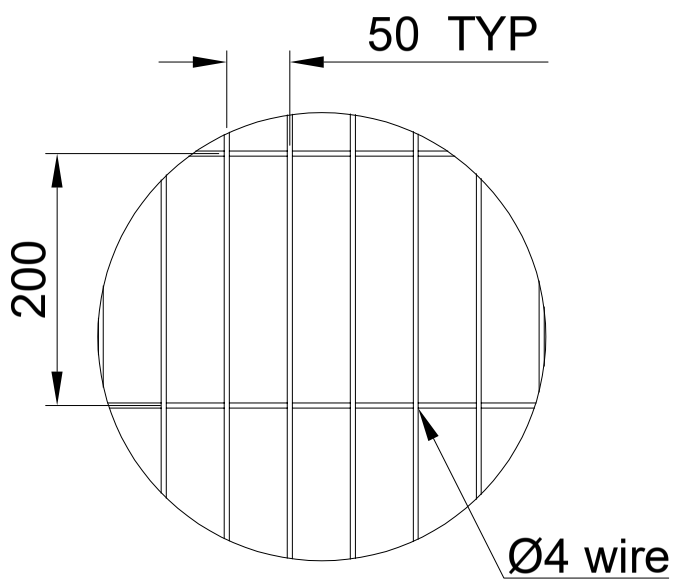

DETAIL **B**
(SCALE 2:1)

NOTES :

1. ALL DIMENSION ARE IN MILLIMETER UNLESS OTHERWISE NOTED.

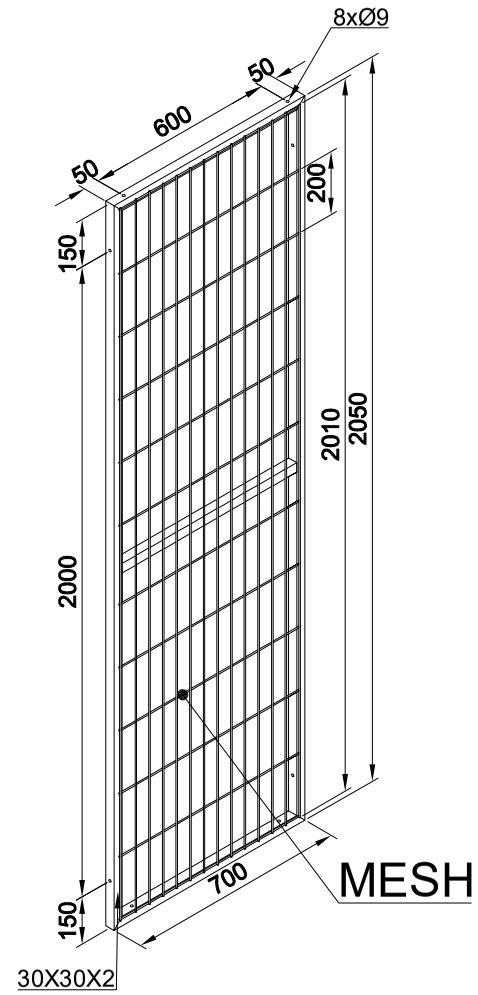

ISOMETRIC VIEW

BOM PENEL FRAME (Qty = 1)

NO	PATR NAME	MATERIAL	FINISHING	PROFILE	L	QTY
1	SQUARE TUBE	CARBON STEEL	GAL/POWER COATING	30X30X2mm	2050	2
2	SQUARE TUBE	CARBON STEEL	GAL/POWER COATING	30X30X2mm	700	2
3	SQUARE TUBE	CARBON STEEL	GAL/POWER COATING	30X30X2mm	640	1
4	MESH PENAL	CARBON STEEL	GAL/POWER COATING	wire Ø4mm 50x200 cc leght:2010 wight:660		

DESIGNED BY: MAAZ	SUPPLIER: HITECH FENCE AND STEEL FACTORY		
DRAWN BY: M.SAEED			
CHECKED BY: MAAZ	BUILDING 3824,STREET NIRA, 2ND INDUSTRIAL CITY, 14338 RIYADH SAUDI ARABIA +966 11 474 8635		
APPROVED BY: MJI			
DRAWING TITLE: HI 30 MACHINE GUARDING PANEL		PAPER SIZE A3	SHEET NO. 01 / 01
DRAWING NO.: HIP352020570		REV. NO. A	SCALE: 1:8
			DATE: 18-JAN-25